36. Drive Pinion Shaft Assembly

A: REMOVAL

1) Remove the transmission assembly from vehicle body. <Ref. to 4AT-37, REMOVAL, Automatic Transmission Assembly.>
2) Pull out the torque converter clutch assembly. <Ref. to 4AT-69, REMOVAL, Torque Converter Clutch Assembly.>
3) Remove the input shaft.

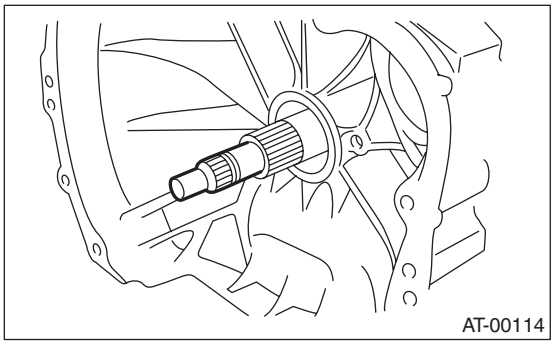

4) Lift up the lever on the rear side of transmission harness connector, and then disconnect it from the stay.
5) Disconnect the inhibitor switch connector from the stay.
6) Disconnect the air breather hose. <Ref. to 4AT-67, REMOVAL, Air Breather Hose.>
7) Remove the oil charge pipe. <Ref. to 4AT-68, REMOVAL, Oil Charge Pipe.>
8) Remove the oil cooler inlet and outlet pipes. <Ref. to 4AT-65, REMOVAL, ATF Cooler Pipe and Hose.>
9) Separate the converter case and transmission case. <Ref. to 4AT-88, REMOVAL, Converter Case.>
10) Separate the transmission case and extension case section. <Ref. to 4AT-70, REMOVAL, Extension Case.>
11) Remove the reduction drive gear. (MP-T model) <Ref. to 4AT-83, REMOVAL, Reduction Drive Gear.>
12) Remove the center differential carrier. (VTD model) <Ref. to 4AT-85, REMOVAL, Center Differential Carrier.>
13) Remove the reduction driven gear. <Ref. to 4AT-81, REMOVAL, Reduction Driven Gear.>
14) Remove the drive pinion shaft mounting bolt and remove the drive shaft assembly from oil pump housing.

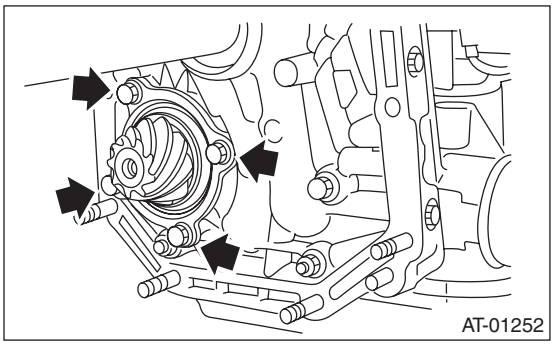

B: INSTALLATION

1) Assemble the drive pinion assembly to the oil pump housing.

NOTE:
- Be careful not to bend the shim.
- Be careful not to press-fit the pinion into housing bore.

Tightening torque:
40 N·m (4.1 kgf-m, 29.5 ft-lb)

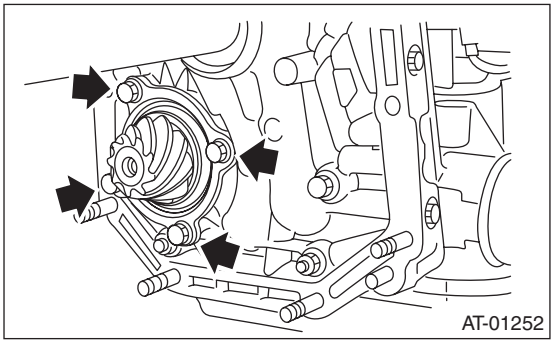

2) Join the torque converter case with the transmission case. <Ref. to 4AT-88, INSTALLATION, Converter Case.>
3) Install the reduction driven gear. <Ref. to 4AT-81, INSTALLATION, Reduction Driven Gear.>
4) Install the reduction drive gear. (MP-T model) <Ref. to 4AT-83, INSTALLATION, Reduction Drive Gear.>
5) Install the center differential carrier. (VTD model) <Ref. to 4AT-85, INSTALLATION, Center Differential Carrier.>
6) Join the transmission case and the extension case, and then install the rear vehicle speed sensor. <Ref. to 4AT-70, INSTALLATION, Extension Case.>
7) Insert the inhibitor switch and transmission connector to the stay.
8) Install the oil cooler inlet and outlet pipes. <Ref. to 4AT-66, INSTALLATION, ATF Cooler Pipe and Hose.>
9) Install the oil charge pipe with O-ring.

10) Insert the input shaft, and check the amount of protrusion.

NOTE:
Turn the input shaft lightly by hand while inserting.

Normal protrusion amount A:
50 — 55 mm (1.97 — 2.17 in)

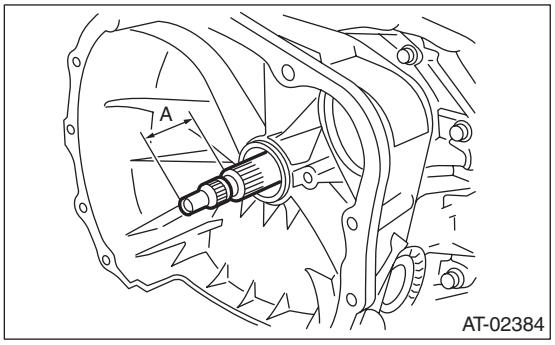

11) Install the torque converter clutch assembly. <Ref. to 4AT-69, INSTALLATION, Torque Converter Clutch Assembly.>
12) Install the transmission assembly to the vehicle. <Ref. to 4AT-39, INSTALLATION, Automatic Transmission Assembly.>

C: DISASSEMBLY

1) Flatten the lock nut tab, and then remove the lock nut while holding the rear spline part of the shaft using ST1 and ST2. Pull out the drive pinion collar.

ST1 498937110 HOLDER
ST2 499787700 WRENCH
ST3 499787500 ADAPTER

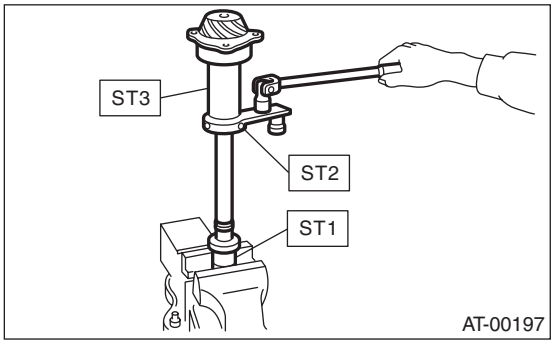

2) Remove the O-ring.

3) Separate the roller bearing and outer race from shaft using a press.

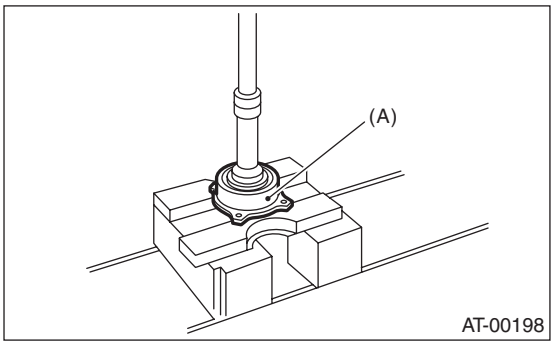

(A) Outer race

4) Separate the front roller bearing from shaft using a press and ST.

ST 498517000 REPLACER

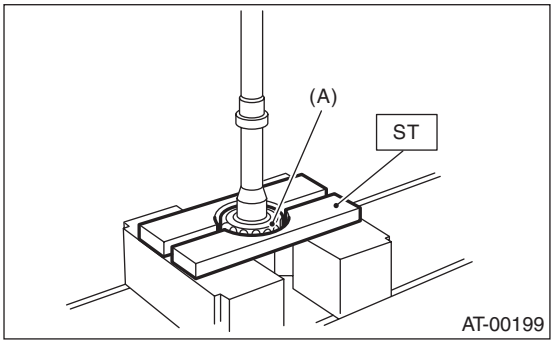

(A) Front roller bearing

D: ASSEMBLY

1) Measure the dimension “A” of drive pinion shaft.
ST 398643600 GAUGE

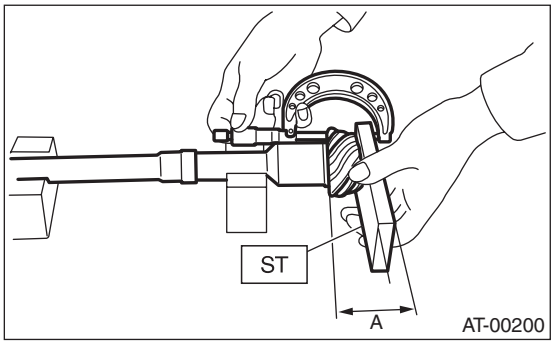

2) Using a press, press-fit the new roller bearing into the specified position.

NOTE:
If excessive force is applied to roller bearing, the roller bearing will not turn easily.

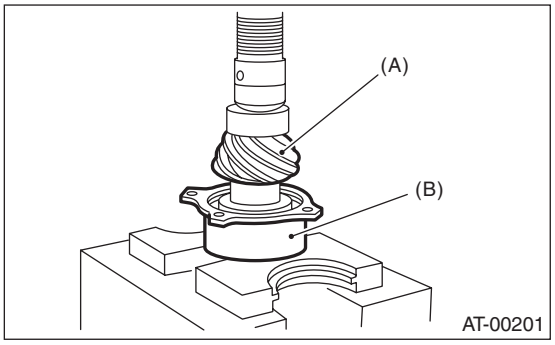

(A) Drive pinion shaft
(B) Roller bearing

3) After fitting a new O-ring to the shaft, attach the drive pinion collar to the shaft.
4) Install the lock washer to drive pinion shaft in the proper direction.

5) Tighten the new lock nuts using ST1, ST2 and ST3.
Calculate the lock washer and lock nut specifications using following formula.
T2 = L2/(L1 + L2) × T1
T1: 116 N·m (11.8 kgf-m, 85.3 ft-lb)
[Required torque setting]
T2: Tightening torque
L1: ST2 length 0.072 m (2.83 in)
L2: Torque wrench length
Example:

Torque wrench length m (in)	Tightening torque N·m (kgf-m, ft-lb)
0.4 (15.75)	98 (10.0, 72)
0.45 (17.72)	100 (10.2, 73.8)
0.5 (19.69)	101 (10.3, 74.5)
0.55 (21.65)	102 (10.4, 75)

ST1 498937110 HOLDER
ST2 499787700 WRENCH
ST3 499787500 ADAPTER

NOTE:
Attach ST2 to torque wrench as straight as possible.

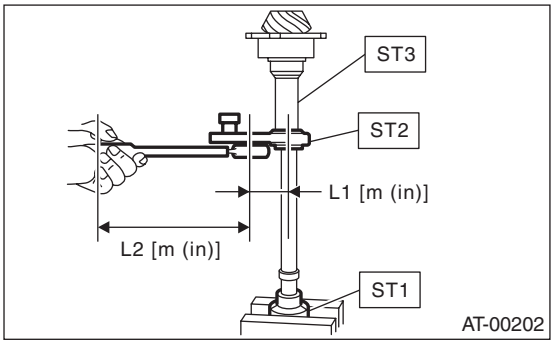

6) Measure the starting torque of the bearing. Make sure the starting torque is within the specified range. If the torque is not within specified range, replace the roller bearing.

Starting torque:
MP-T model
7.6 — 38.1 N
(0.776 — 3.88 kgf, 1.7 — 8.6 lbf)
VTD model
6.8 — 47.5 N
(0.69 — 4.84 kgf, 1.52 — 10.67 lbf)

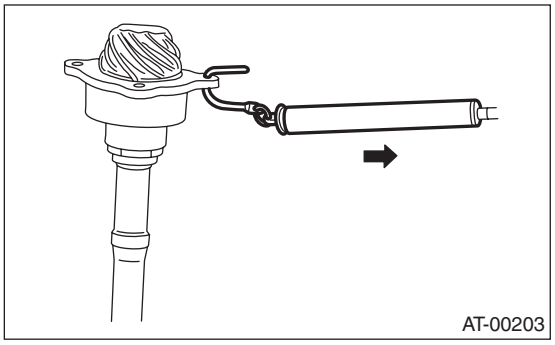

7) Crimp the locknut in two locations.
8) Measure dimension “B” of the drive pinion shaft.
ST 398643600 GAUGE

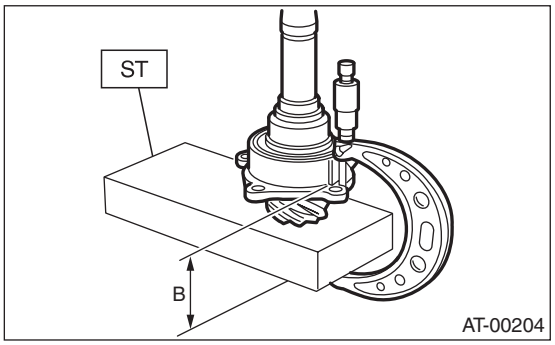

9) Calculate the thickness “t” (mm) of the drive pinion shim.
t = 6.5±0.0625 – (B – A)
10) Select three or less shims from following table.

Drive pinion shim	
Part No.	Thickness mm (in)
31451AA050	0.150 (0.0059)
31451AA060	0.175 (0.0069)
31451AA070	0.200 (0.0079)
31451AA080	0.225 (0.0089)
31451AA090	0.250 (0.0098)
31451AA100	0.275 (0.0108)

E: INSPECTION

- Make sure that all component parts are free of scratches, holes and other faults.
- Adjust the tooth alignment. <Ref. to 4AT-99, ADJUSTMENT, Drive Pinion Shaft Assembly.>

F: ADJUSTMENT

1) Remove the liquid gasket from the mating surface completely.
2) Install the oil pump housing assembly to the converter case, and secure them by tightening the four bolts evenly.

NOTE:
Use an old gasket or aluminum washer to prevent damaging the mating surface of the housing.

Tightening torque:
41 N·m (4.2 kgf-m, 30.2 ft-lb)

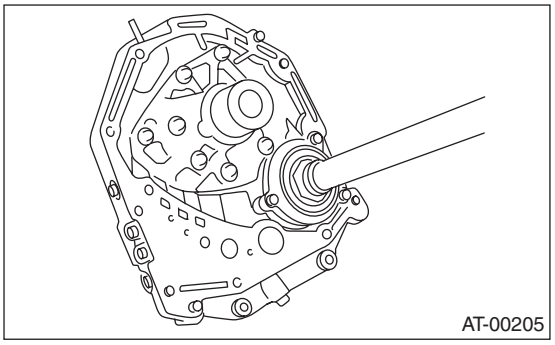

3) Rotate the drive pinion a few times using ST1 and ST2.
ST1 498937110 HOLDER
ST2 499787700 WRENCH

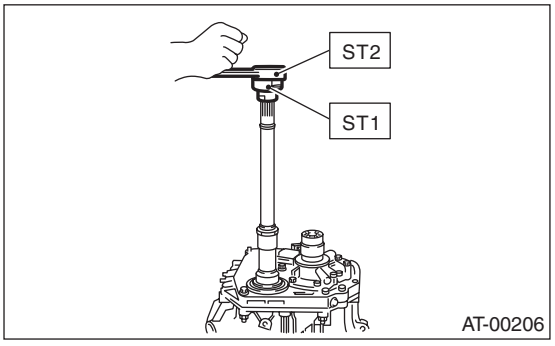

4) Adjust the drive pinion and hypoid driven gear backlash. <Ref. to 4AT-106, ADJUSTMENT, Front Differential Assembly.>
5) Apply red lead evenly to the surfaces of three or four teeth on hypoid driven gear. Rotate the drive pinion back and forward several times. Remove the oil pump housing, and check the teeth contact pattern.
If the teeth contact is inappropriate, adjust the backlash or thickness of the shim. <Ref. to 4AT-106, ADJUSTMENT, Front Differential Assembly.>

- Correct tooth contact

Check item: Tooth contact surface is slightly shifted toward the toe side under a no-load condition. (When driving, it moves towards the heel side.)

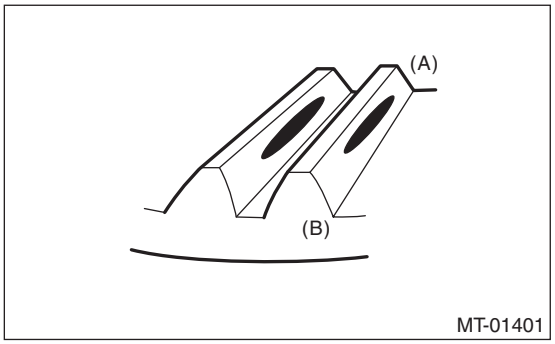

(A) Toe side
(B) Heel side

- Face contact

Check item: Backlash is too large.
Contact pattern

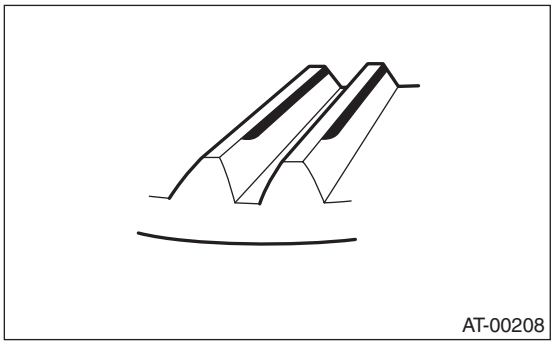

Corrective action: Increase thickness of pinion height adjusting washer according to the procedures for moving the drive pinion closer to the driven gear.

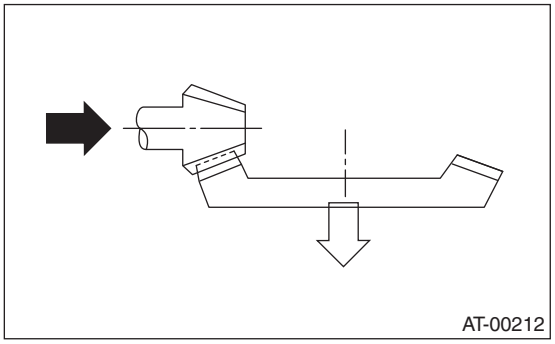

- Flank contact

Check item: Backlash is too small.
Contact pattern

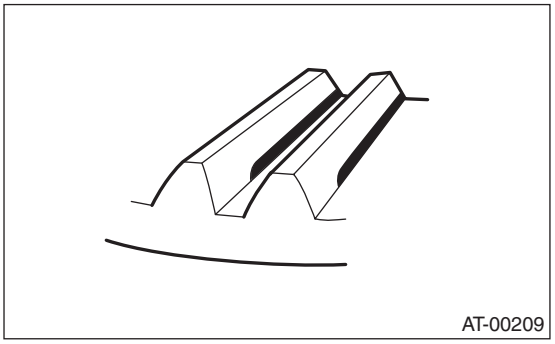

Corrective action: Reduce thickness of the pinion height adjusting washer according to the procedures for moving the drive pinion away from the driven gear.

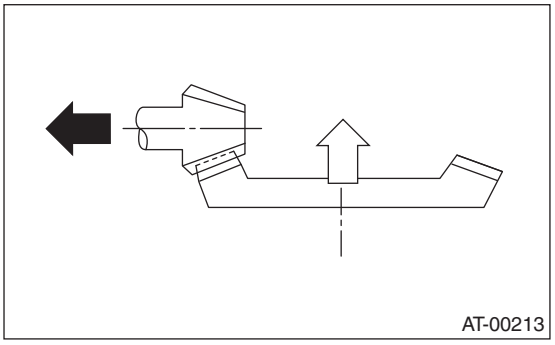

- Toe contact (inside contact)

Check item: Teeth contact area is too small.
Contact pattern

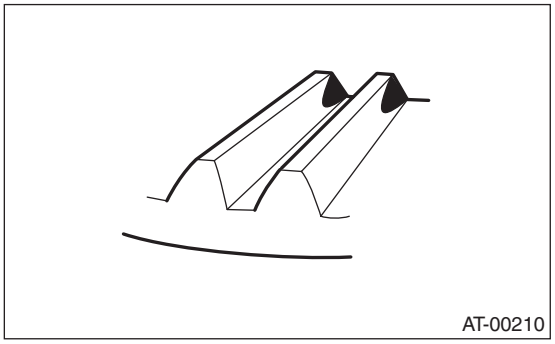

Corrective action: Reduce thickness of the pinion height adjusting washer according to the procedures for moving the drive pinion away from the driven gear side.

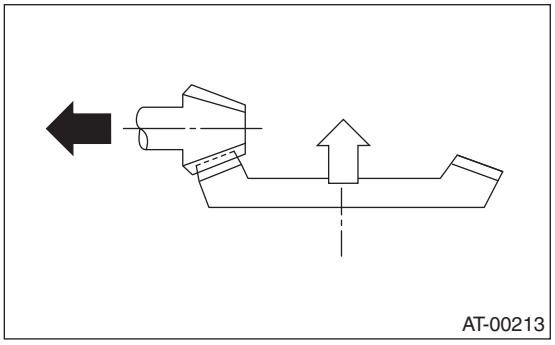

- Heel contact (outside end contact)

Check item: Teeth contact area is too small.
Contact pattern

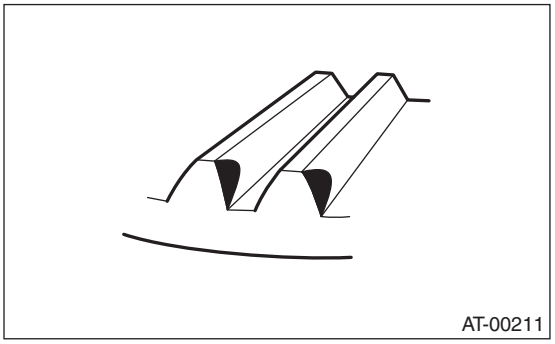

Corrective action: Increase thickness of pinion height adjusting washer according to the procedures for moving the drive pinion closer to the driven gear.

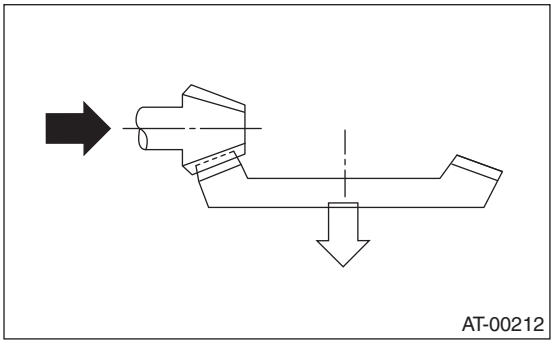

6) If tooth contact is correct, mark the retainer position and loosen it. After fitting a new O-ring and oil seal, screw in the retainer to the marked position. Tighten the lock plate with specified torque.

Tightening torque:
25 N·m (2.5 kgf-m, 18.4 ft-lb)

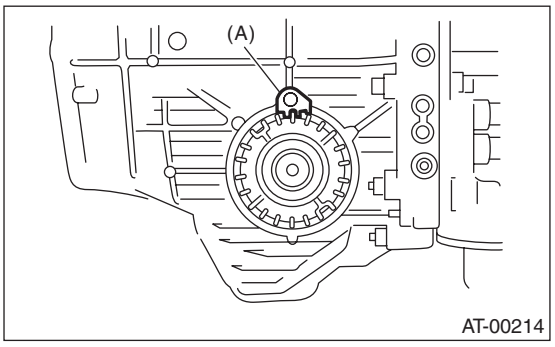

(A) Lock plate